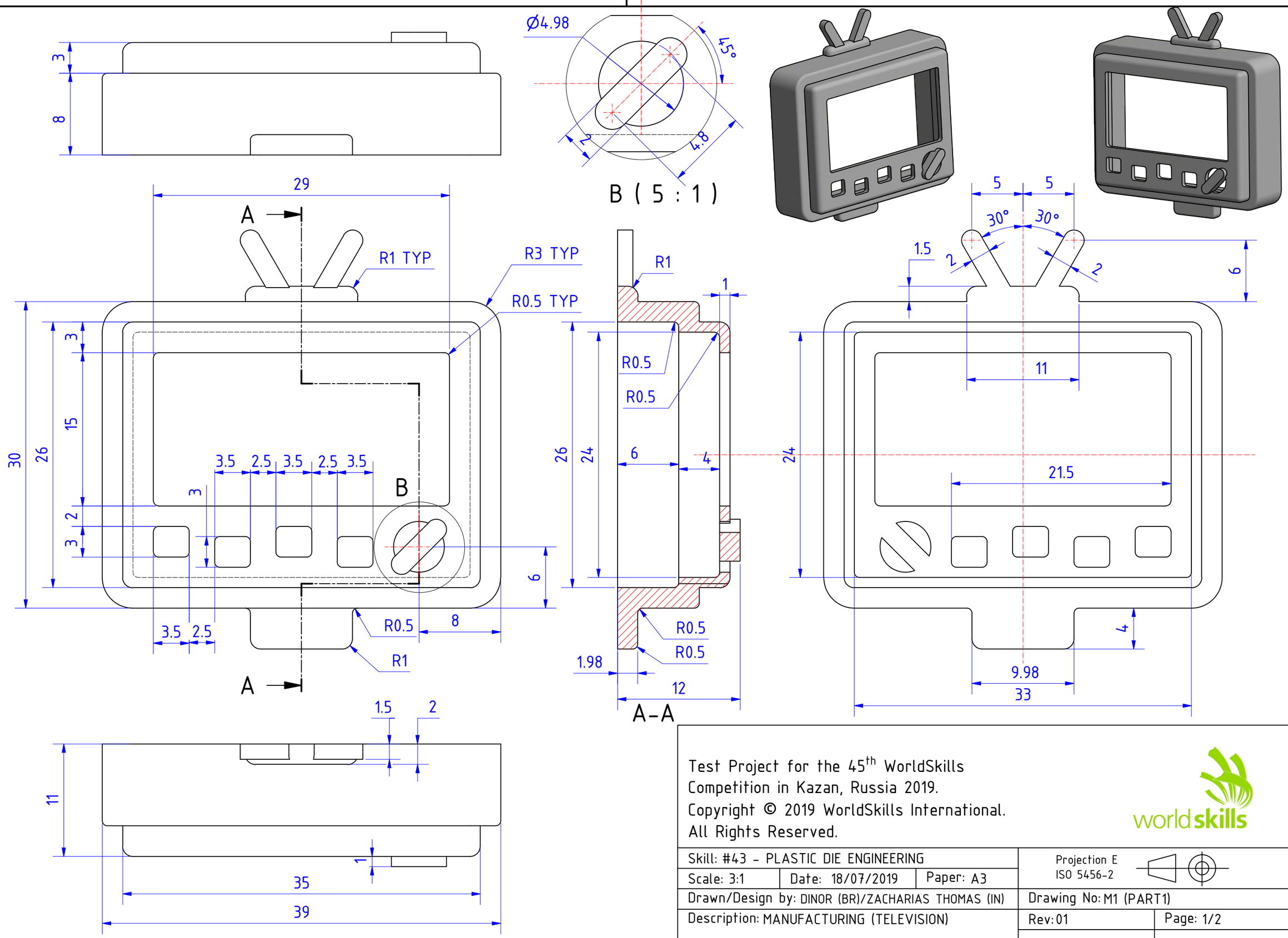

Test Project for the 45th WorldSkills Competition in Kazan, Russia 2019.

Copyright © 2019 WorldSkills International.
All Rights Reserved.

Skill: #43 - PLASTIC DIE ENGINEERING			Projection E ISO 5456-2
Scale: 3:1	Date: 18/07/2019	Paper: A3	
Drawn/Design by: DINOR (BR)/ZACHARIAS THOMAS (IN)			Drawing No: M1 (PART1)
Description: MANUFACTURING (TELEVISION)			Rev: 01 / Page: 1/2