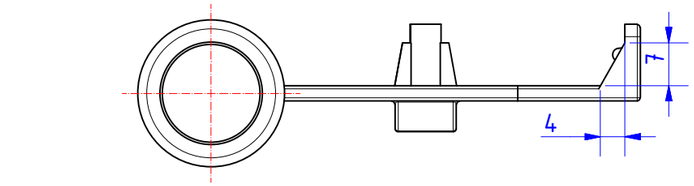

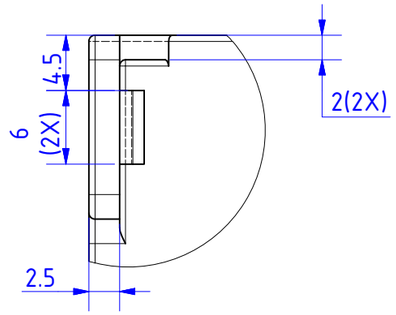

E (2 : 1)

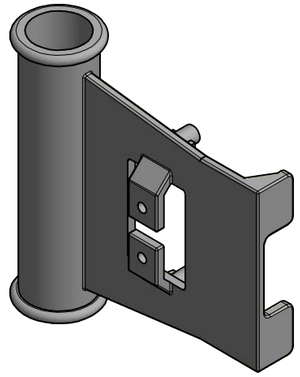

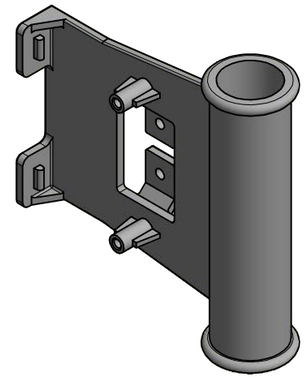

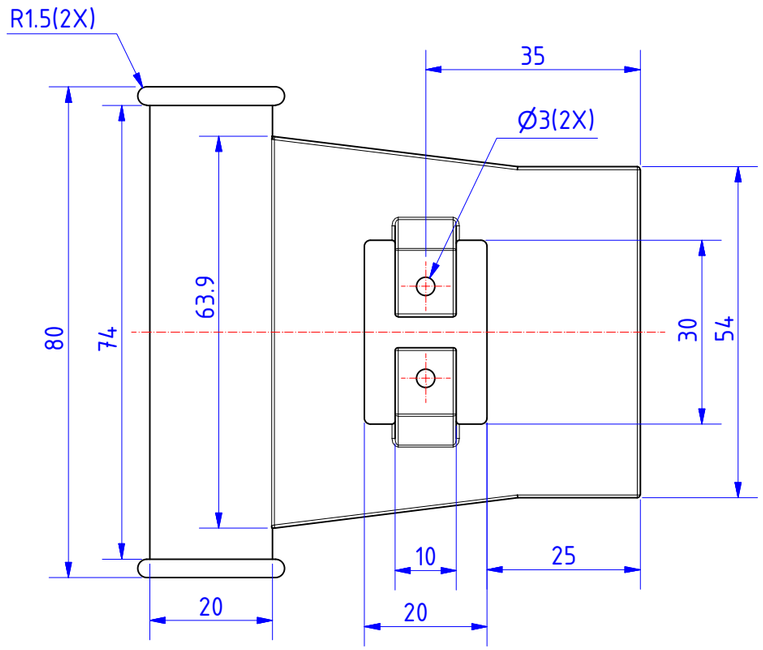

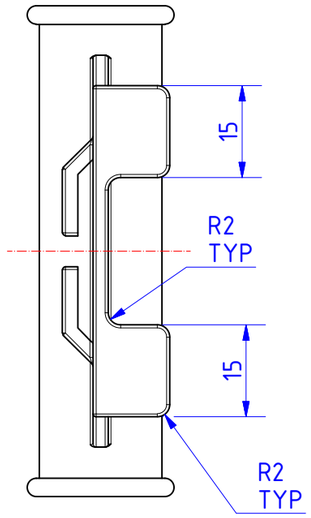

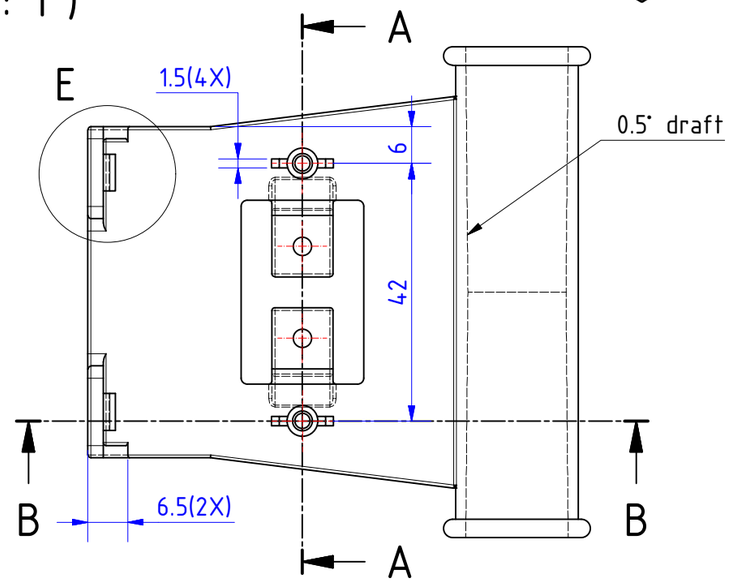

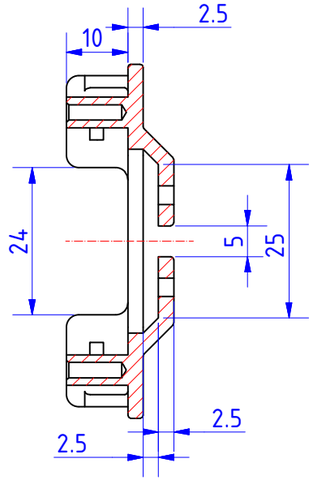

A-A (1 : 1)

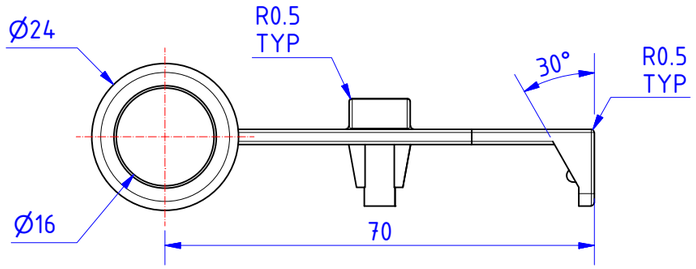

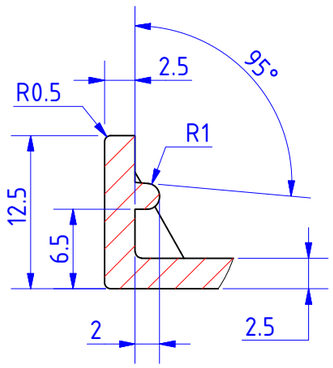

D (2 : 1)

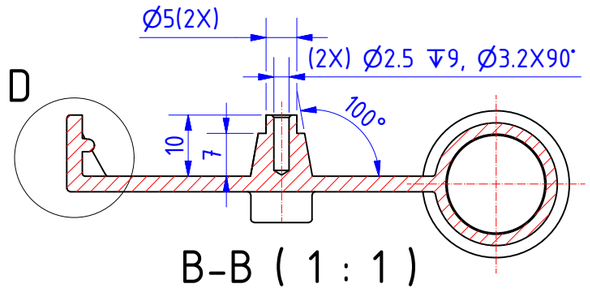

B-B (1 : 1)

Note :
1. Design a two cavity mold.
2. The Moulding compound is ABS (shrinkage approx. 0.5%).
3, Refer the CAD drawing for missing dimensions.
4. Unspecified radius : 0.5mm

Test Project for the 45th WorldSkills Competition in Kazan, Russia 2019.

Copyright © 2019 WorldSkills International.
All Rights Reserved.

Skill: #43 PLASTIC DIE ENGINEERING			
Scale: 1 : 1	Date: 27/07/2019	Paper: A3	
Drawn / Design by: ZACHARIAS THOMAS (IN)			Drawing No: M2
Description: MOULD DESIGN			Rev: -- / Page: 1/1